MOEN®
COMMERCIAL

Specifications

Model Number	Faucet Holes	Depth-Inches	Drain Placement
22121Q	4	11"	Center

SINK DESCRIPTION
- Commercial double bowl drop in sink
- 18 gauge stainless steel
- QuickMount™ installation hardware included
- SoundSHIELD™ sound absorbing system

WARRANTY
- Lifetime limited warranty to the original homeowner
- 10 year limited warranty when used in a Multi-family installation
- 5 year limited warranty when used in a Commercial installation
- Visit www.moen.com/customer-support/warranty for complete details and limitations

SINK DIMENSIONS
- Overall: 33" x 22"
- Left Bowl: 14" x 16"
- Right Bowl: 14" x 16"
- Drain Size: 3-1/2"

CUT OUT DIMENSIONS
- 32-1/2" x 21-1/2" with 3/8" corner radius, tolerance of plus or minus 1/16" is acceptable

STANDARDS
- Third party certified to meet ASME A112.19.3/CSA B45.4 and all applicable specifications referenced therein

CRITICAL DIMENSIONS
(DO NOT SCALE)

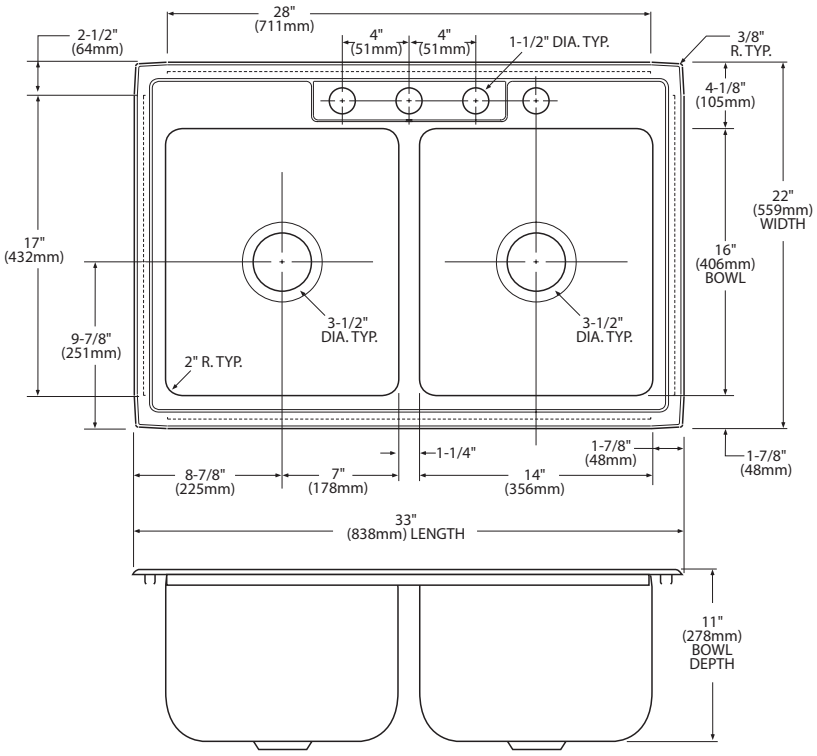

Installation Detail

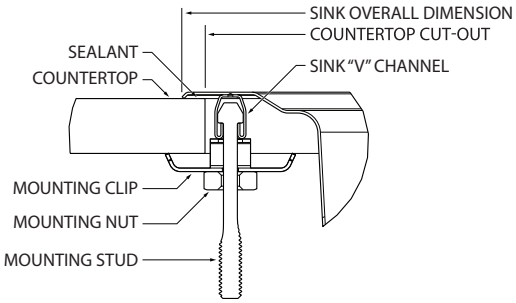

MADE IN THE USA

Rev. 6/17

MOEN SPECIFIER SERVICES 1-800-321-8809 Ext. 2158
www.moen.com

07/31/2017 SPC15/87 5000003047242
Released01